■ BLOCK DIAGRAM

FUNCTION

• See page 63–65 → SCHEMATIC DIAGRAM

MAIN
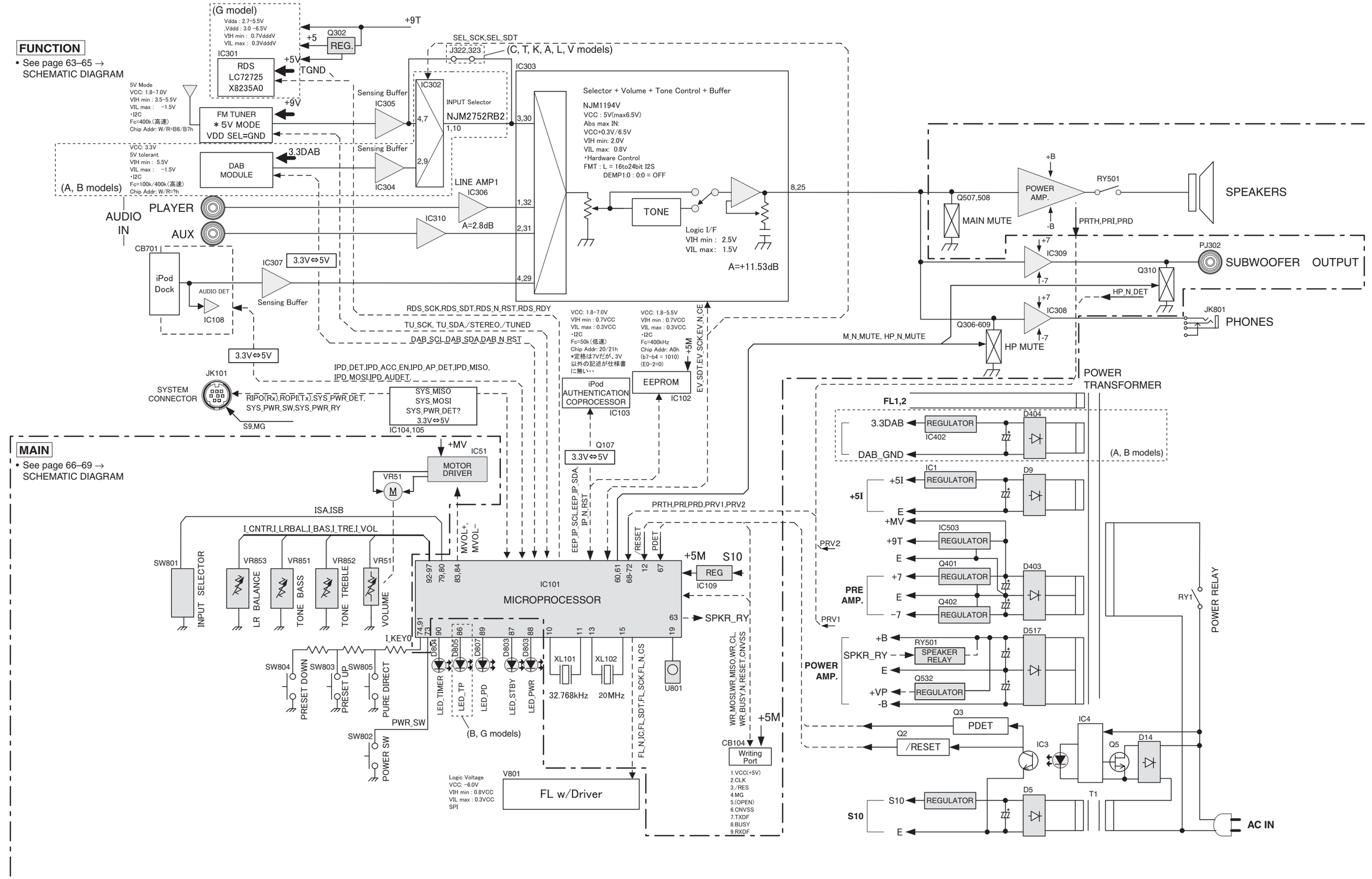
• See page 66–69 → SCHEMATIC DIAGRAM